# Glass Door Freezers

REFRIGERATOR MANUFACTURER **Turbo air**

## Digitally Controlled Uniform Temperature

**Distributed By:**
**Commercial Refrigeration Service, Inc.**
**http://WWW.IceCubes.NET**
**623-869-8881 or toll free 866-IceMakers**

**TGF-23F**

**TGF-49F**

**TGF-72F**

## FEATURES / BENEFITS

- **Digital Temperature Control System**
  Provides precise and constant temperature. This level of precision allows food products to remain fresh over an extended period of time.
- **High-Tech Monitor**
  The unit will beep if the door has been opened for more than 5 minutes. The monitor digitally displays the present temperature and current status of the refrigerator.You can easily change the temperature by adjusting the thermostat.
- **Efficient Refrigeration System**
  Turbo Air's freezers are designed with oversized and balanced (CFC Free R-404A) refrigeration systems. These include efficient evaporators and condensers for faster freezing and greater efficiency.
- **Automatic Evaporator Fan Motor Delays**
  Through stopping the evaporator fan when the freezer door opens, the circulation of hot, moist air into the freezer is prevented. This increases energy efficiency and lengthens the life of the compressor.
- **Triple Pane Heated Glass Doors with Heat Reflecting Film**
  Equipped with unique triple pane heated glass doors with a layer of patented, transparent thermal insulating film applied between theglass layers. Lightweight door construction reduces door maintenance and roller wear, and facilitates smoothdoor opening.
- **Adjustable, Heavy Duty, PE (polyethylene) Coated Wire Shelves**
- **High-density Polyurethane Insulation**
  The entire cabinet structure is formed-in-place using high density, CFC free polyurethane insulation.
- **Ergonomically Designed Doors**
  Customers' fatigue fades away with easy grip handles and doors that open effortlessly. Self-closing and stay open doors features make this the ultimate choice in customer convenience.
- **Magnetic Door Gaskets**
  Magnetic door gaskets are of one piece construction, removable without tools for ease of cleaning and replacement.
- **Bottom Mount Compressor Units**
  Turbo Air's bottom mount compressor allows easier access for service and extra storage space above. In addition, the lower area provides a cooler and less greasy operating environment which results in reduced compressor running time.
- **Individual Two Cycle Freezing Systems (TGF-72F Model Only)**
- **Freezer Holds -15°F ~ 5°F for The Best in Frozen Food Preservation**

| Model | Swing Door | CU./FT. | #of Shelves | HP | AMPS | Crated Weight | L D H |
|---|---|---|---|---|---|---|---|
| TGF-23F | 1 | 23 | 4 | 2/3 | 8.2 | 376 | 27 x 29 3/4 x 77 |
| TGF-49F | 2 | 49 | 8 | 1-1/2 | 11 | 587 | 54 3/8 x 29 3/4 x 77 |
| TGF-72F | 3 | 72 | 12 | 1-1/4 x 2 | 15 | 848 | 81 7/8 x 29 3/4 x 77 |

* Height does not include 6" for caster height. * Depth does not include 1-1/2" for glass door handles.
* TGF-49F, TGF-72F requires dual voltage 115/208 ~ 230V (NEMA L14 - 20)

# TGF MODELS SPECIFICATIONS

| MODEL | TGF-23F | TGF-49F | TGF-72F |
|---|---|---|---|
| Exterior Dimension (LxDxH) | 27x29 3/4x77 | 54 3/8x29 3/4x77 | 81 7/8x29 3/4x77 |
| Interior Dimension (LxDxH) | 23x26 1/4x60 3/8 | 50 1/2x24 3/4x60 3/8 | 78x24 3/8x60 3/8 |
| Cubic Feet | 23 | 49 | 72 |
| Compressor (HP) | 2/3 | 1 1/2 | 1 1/4x2 |
| Voltage (NEMA-5-15P) (NEMA-L14-20) | 115/60/1 | 115/208~230/60/1 | 115/208~230/60/1 |
| Amp | 8.2A | 11A | 15A |
| Cord Length (ft) | 7 | 7 | 7 |
| Plug-in | NEMA 5-15p | NEMA L14-20 | NEMA L14-20 |
| # of Shelves | 4 ea | 8 ea | 12 ea |
| Shelf Size | 21 3/4x22 1/2 | 21 3/4x22 1/2 | 24 3/8x23 1/4 |
| Net Weight | 355 lbs | 554 lbs | 800 lbs |

*Design and specifications subject to change without notice.

- **WHITE COLOR CABINET & WHITE COLOR FRAME ON DOOR**
- **TRIPLE PANE HEATED GLASS DOOR**
- **FLOURESCENT LIGHTED INTERIOR DISPLAY FOR ADVERTISING EFFECT**
- **4" SWIVEL CASTERS STANDARD**

- **WARRANTY : 1 Year Labor and Parts Warranty**
  **Additional 4 Years Warranty on Compressor**

**Distributed By:**
**Commercial Refrigeration Service, Inc.**
**http://WWW.IceCubes.NET**
**623-869-8881 or toll free 866-IceMakers**

(unit : inch)

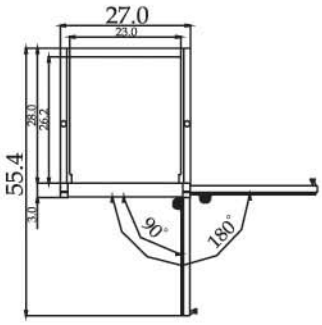


**TGF-23F PLAN VIEW**

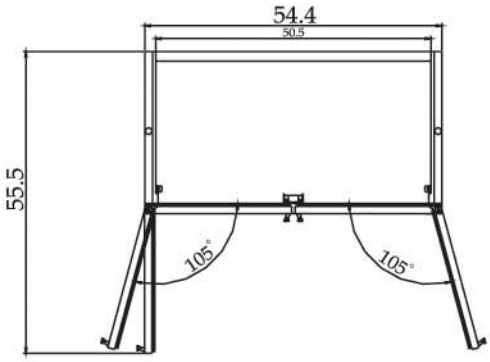


**TGF-49F PLAN VIEW**

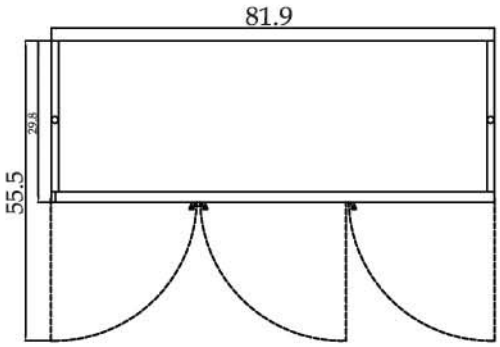


**TGF-72F PLAN VIEW**

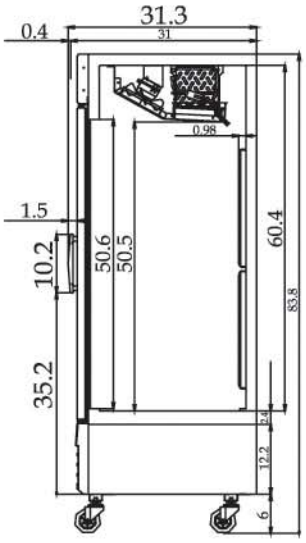


**TGF-23F SIDE VIEW**

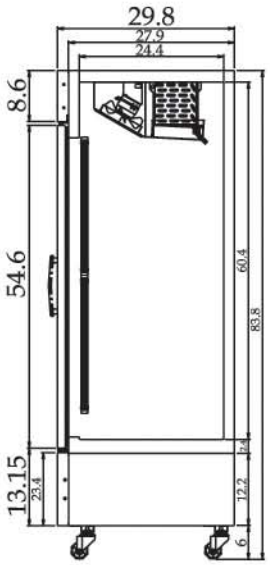


**TGF-49F SIDE VIEW**

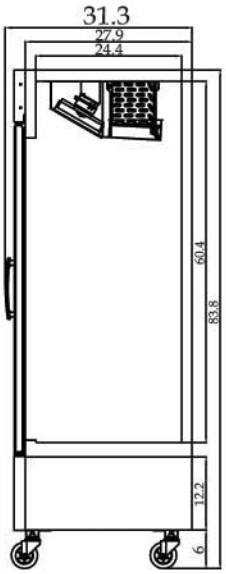


**TGF-72F SIDE VIEW**